C-14379

| ITEM | DESCRIPTION | DETAIL | REQUIRED FXD. | REQUIRED FLT. |
|---|---|---|---|---|
| 1 | HOUSING SAF 318 | C-13168-R | 1 | 1 |
| 2 | SPHERICAL ROLLER BEARING | 22318/W-33 | 1 | 1 |
| 3 | STABILIZING RING SR-21-18 | A-11792 | 1 | 0 |
| 4 | LOCKNUT AN-18 | A-10783 | 1 | 1 |
| 5 | LOCKWASHER W-18 | 00243 | 1 | 1 |
| 6 | TRIPLE SEAL RING LER-191 | A-11791 | 1 | 1 |
| 7 | TRIPLE SEAL RING LER-112 | A-11796 | 1 | 1 |
| 8 | DOWEL | $\phi\frac{5}{16}$ x $\frac{5}{8}$ LONG | 2 | 2 |
| 9 | CAP BOLT SQUARE HEAD | $\frac{5}{8}$-11 NC x $7\frac{1}{2}$ LONG | 4 | 4 |
| 10 | CAP BOLT HEX. NUT | $\frac{5}{8}$-11 NC | 4 | 4 |
| 11 | LOCKWASHER | $\frac{5}{8}$ SPLIT MED. | 4 | 4 |
| 12 | PIPE PLUG | $\frac{3}{8}$-18 NPT | 3 | 3 |

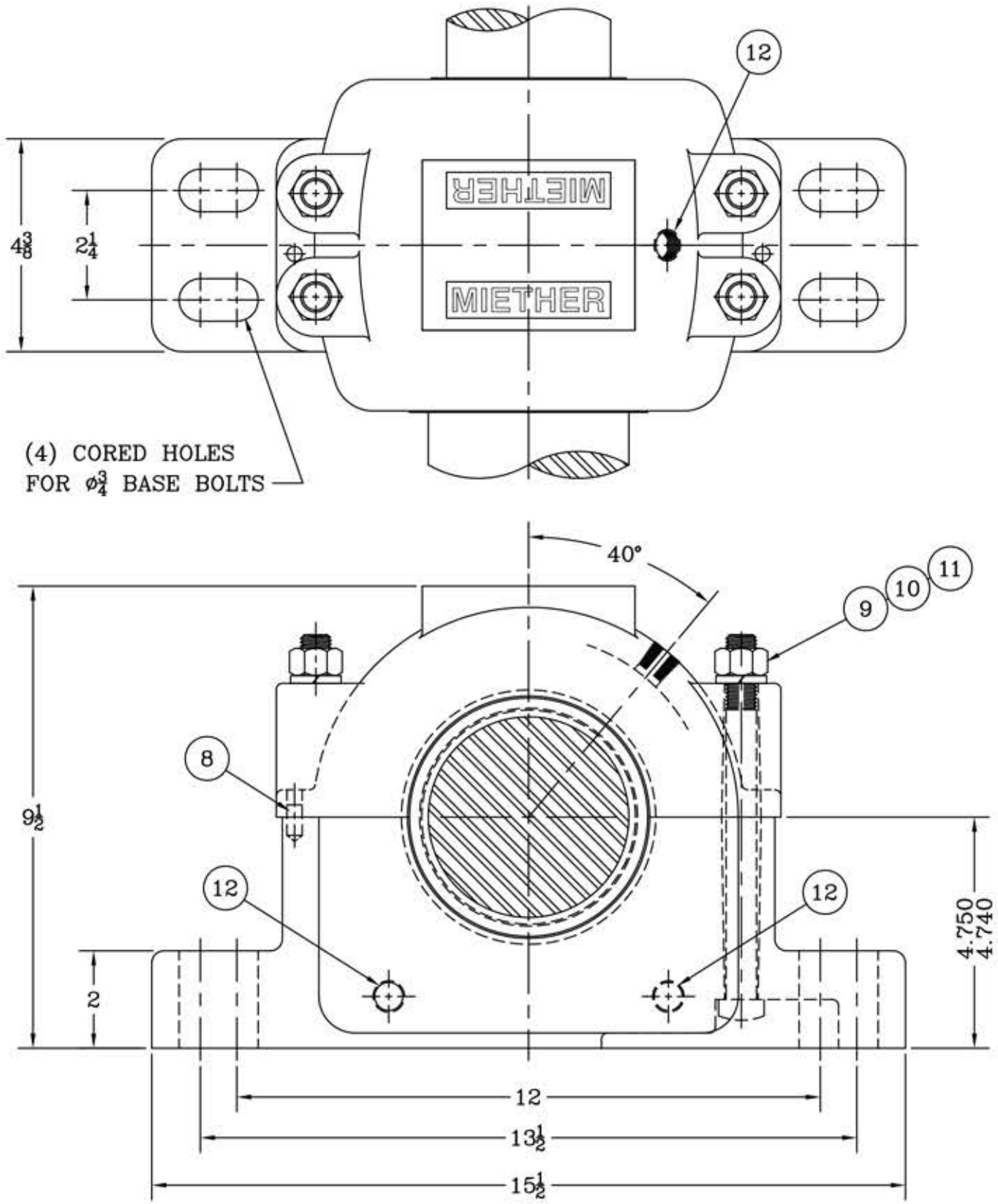


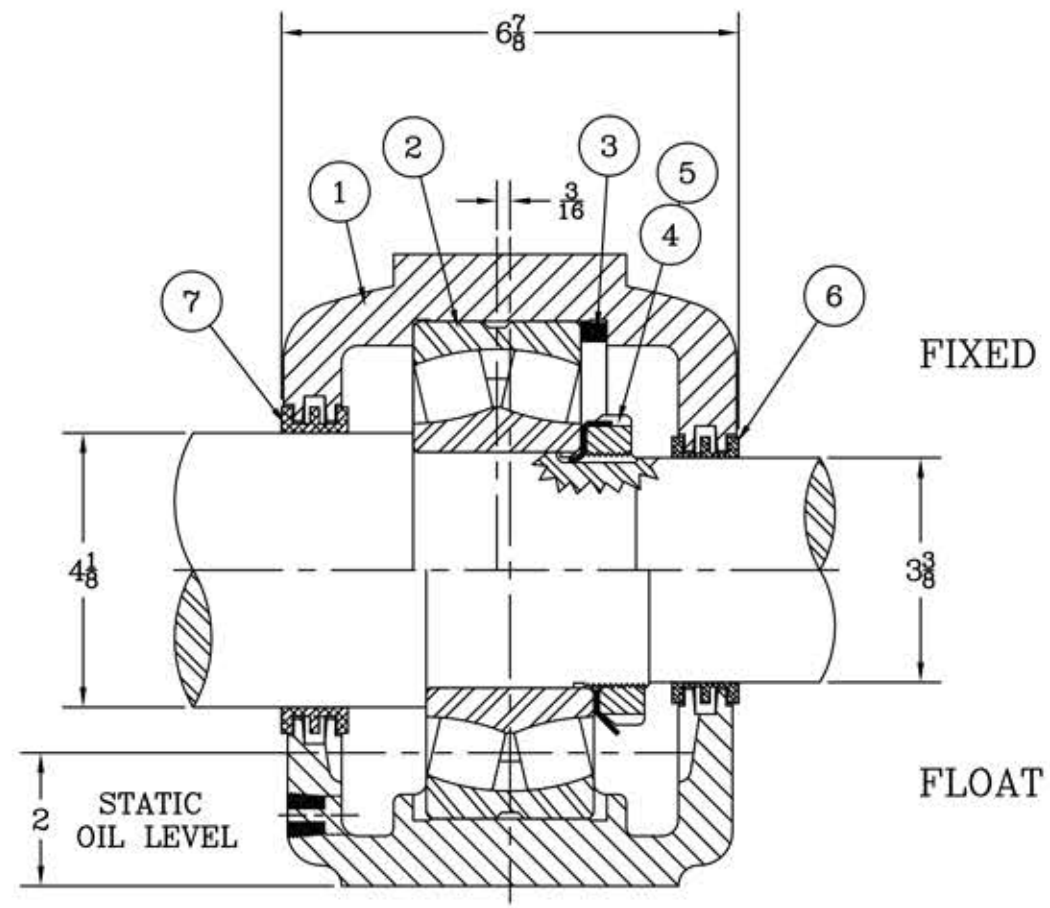


REDRAWN FOR CONFORMITY RWB per KAB 5-3-04

REDRAWN ON COMPUTER per JLL by RWB 4-20-01

REVISIONS

TOLERANCE: UNLESS OTHERWISE SPECIFIED

FRACTIONS +- 1/32" ANGLES +- 0° 30'
DECIMALS +- .005" WELD +- 1/16"
CASTING +- 1/16"

A.I.S.I. STANDARD FINISHES

| SYMBOL | C | D | E | F | G | J | K |
|---|---|---|---|---|---|---|---|
| MICRO-INCH VALUE | 16 | 32 | 63 | 125 | 250 | 500 | 1000 |

MIETHER™ BEARING PRODUCTS

AN ALCO INDUSTRIES COMPANY

ODESSA, TX. USA

SAF 22318 04-02 x 03-06

ASSEMBLY DRAWING

SCALE HALF

DRAWN ---

DATE 2-19-71

CHK:

ASSEMBLY NO.

DRAWING NO. C-14379

This drawing is the sole property of Miether Bearing Products and contains confidential and proprietary information. It is being provided to you for your use and may not be disclosed to any third party or used for any other purpose without Miether's prior written consent. The [materials] must be returned to the Company upon its demand. Your acceptance of these materials constitutes your acceptance of the foregoing terms.